Lafferty Equipment Manufacturing, LLC
Installation & Operation Instructions

Model # 950722 · Portable 20 Gallon 455 4-Way Fogger

REQUIREMENTS

Ready-to-Use Chemical Solution	
Compressed Air	up to 70 CFM @ 80 PSI
Minimum Air Supply Line	1/2"

OPTIONS

Optional Check Valves to Keep Tubes Primed	
Check Valve, Chemical, PP(W), 1/4" (EPDM)	# 491401
For Lighter Fog Use Metering Tips (4 Sets)	
Metering Tips-Color Coded (10 Smallest)	# 443794
Proportioning / Filling Options	
1-Way Ball Valve Mixing Station (4 GPM)	# 985100
1-Way Push Lever Mixing Station (4 GPM)	# 981100
High Volume Mixing Station (9.9 GPM)	# 985835

Lafferty EQUIPMENT MANUFACTURING LLC

CFS TECHNOLOGIES

www.laffertyequipment.com
501-851-2820

WARNING! READ ALL INSTRUCTIONS BEFORE USING EQUIPMENT!

OVERVIEW

The Portable 20 Gallon 455 4-Way Fogger is a dry mist sprayer that uses compressed air (70 CFM @ 80 PSI) and venturi action to draw ready-to-use chemical solution from the tank on the stainless steel cart and project it up to 35 feet in 4 directions. The adjustable output sprays mist (fog) into the air to cover exposed surfaces and penetrate hard-to-reach areas. This unit features a telescoping mast and can also be used as a 2-Way fogger.

SAFETY & OPERATIONAL PRECAUTIONS

- Manufacturer assumes no liability for the use or misuse of this unit.
- Wear proper respiratory protection, protective clothing, gloves and eye-wear when working with chemicals.
- Always direct the discharge away from electrical devices.
- Follow the chemical manufacturer's safe handling instructions.
- Carefully follow chemical manufacturer's safe handling instructions and recommended precautions/practices when using flammable chemicals.
- **SPECIAL CAUTION: This fogger atomizes chemical into the air. Ensure that the area to be fogged has been evacuated of all people without proper respiratory protection!**

TO INSTALL (REFER TO DIAGRAM ON NEXT PAGE)

1. Unpack and connect the 4-way fogger head to the nipples and through the slide brackets as shown in the drawing
2. 4 pick up tube ends are sticking out of the tank lid, push them over the 4 blue metering tip holders. Make sure to place the same tube on the 2 foggers with the ball valves. This allows the unit to be used as a 2 way.
3. Use a separate container with enough water for doing some test runs to familiarize yourself with the fogger before running chemicals through it. This will help you determine the best placement for the best coverage.
4. Place the fogger in the center of the test area to be fogged.
5. Place the 2 pick up tubes/strainers in the water.
6. Connect a 1/2" minimum air line to the fogger that has a shut off valve on the opposite end where the fogger can be turned on and off at a distance. Wear ear protection.
7. Loosen the "L" bolts on the slide brackets and raise the fogger head assembly to preferred height, and tighten the bolts to secure.
8. Move away from the fogger and turn on your air supply, observe the foggers performance. The fog should be consistent and uniform. If it is sputtering and inconsistent you may need to partially close your airline ball valve to fine tune the air volume/pressure.
9. For certain applications the foggers may produce more volume than needed. If fog is too dense, optional metering tips are available for restricting the solution volume to produce a lighter fog
10. Observe the coverage, you may have to move the fogger a time or two for best coverage. Once you are familiar with coverage, operation, and air flow adjustments, you are ready to fog.

TO OPERATE

SPECIAL CAUTION: This fogger atomizes chemical into the air. Ensure that the chemical is safe to be around or the area to be fogged has been evacuated of all people and/or animals before starting fogging. Upon completion of fogging, ensure that sufficient time has elapsed for all the fog to have dissipated before returning to the area without proper respiratory protection.

1. Fill the tank with the desired amount of ready to use solution you want to "fog" and place the tubes in the chemical solution.
2. Place the fogger in the center of the area to be fogged.
3. Loosen the "L" bolts on the slide brackets and raise the fogger head assembly to preferred height, and tighten the bolts to secure.
4. Connect your 1/2" minimum air line to the fogger do not turn on!!
5. Make sure you are out of the area to be fogged and turn on your air supply. Adjust airline ball valve if needed based on your testing with water.
6. For certain applications the foggers may produce more volume than needed. If fog is too dense, optional metering tips are available for restricting the solution volume to produce a lighter fog
7. Fogger will continue to run until the air supply is manually turned off.
8. Depending on the application, you will have to experiment with the amount of time and solution required to achieve the desired results.
9. Turn air supply off when finished. Do NOT re-enter room without proper respiratory protection until fog dissipates.

PORTABLE 455 4-WAY FOGGER

PROJECTS DRY FOG/MIST UP TO 35'

COMPRESSED AIR FLOW (CFM)		
PLUMES	**60 PSI**	**80 PSI**
4-Way	54.0	70.0

CHEMICAL SOLUTION DRAW RATE (FL-OZ/MIN)		
DISTANCE	**60 PSI**	**80 PSI**
80" Above Chemical	41.0	48.0
60" Above Chemical	47.0	52.0

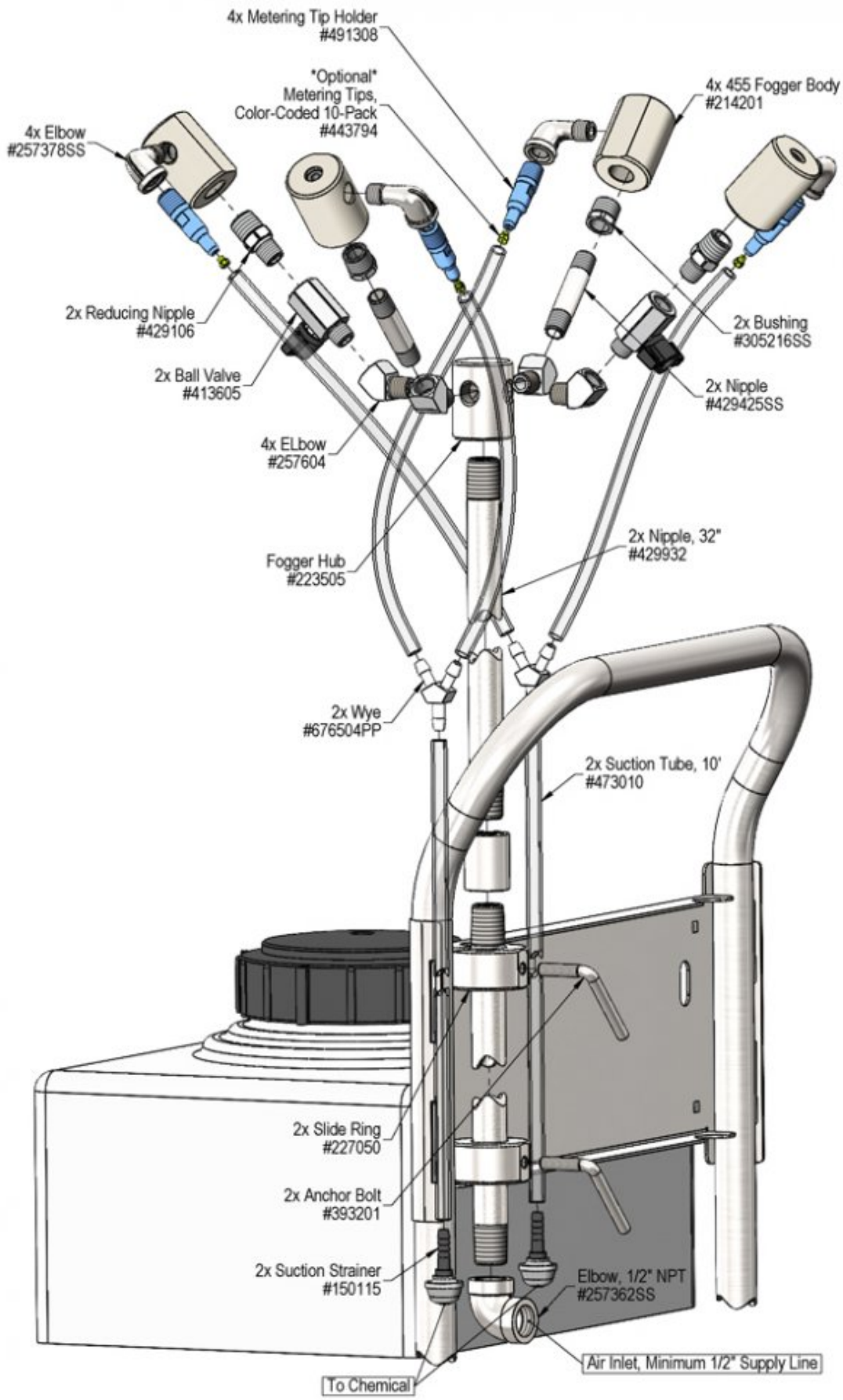
4x Metering Tip Holder
#491308
Optional
Metering Tips,
Color-Coded 10-Pack
#443794
4x 455 Fogger Body
#214201
4x Elbow
#257378SS
2x Reducing Nipple
#429106
2x Bushing
#305216SS
2x Ball Valve
#413605
2x Nipple
#429425SS
4x ELbow
#257604
2x Nipple, 32"
#429932
Fogger Hub
#223505
2x Wye
#676504PP
2x Suction Tube, 10'
#473010
2x Slide Ring
#227050
2x Anchor Bolt
#393201
2x Suction Strainer
#150115
Elbow, 1/2" NPT
#257362SS
Air Inlet, Minimum 1/2" Supply Line
To Chemical

Troubleshooting Guide

Problem	Possible Cause / Solution	
	Startup	Maintenance
A) Fogger will not draw chemical or is sputtering	1, 2, 3, 4	6, 7, 8, 9
B) Fog is too wet	1, 5	

Possible Cause / Solution

Startup

1. **Air line too small, not enough air pressure or volume**
   - See REQUIREMENTS, page 1.
2. **Air pressure too high.**
   - Slightly close the air supply valve to lower the pressure by lowering the volume until the fogger smooths out.
3. **Fogger too high to draw chemical, 12' maximum**
   - Raise the level of the chemical
4. **Chemical tube kinked or not immersed in chemical or chemical depleted.**
   - Straighten tube / replenish chemical
5. **Drawing too much solution**
   - Order and install optional metering tip or needle valve (needle valve 4 & 8-Way only).

Maintenance

6. **Pin hole or cut in suction tube**
   - Replace suction tube.
7. **Chemical strainer clogged up**
   - Clean or replace
8. **Metering tip or metering tip holder clogged**
   - Clean or replace metering tip and/or metering tip holder.
9. **Debris clogging the fogger inlet jets**
   - Disconnect air supply, remove fogger bodies and visually inspect; remove debris from fogger inlet.

PREVENTIVE MAINTENANCE: When the unit will be out of service for extended periods, place chemical tube(s) in water and flush the chemical out of the unit to help prevent chemical from drying out and causing build-up. Periodically check and clean chemical strainer and replace if missing.