Lafferty Equipment Manufacturing, LLC
Installation & Operation Instructions

Model # 980105SS · 105HCSS Mixing Station

REQUIREMENTS

Chemical Concentrate

Water

Temperature	up to 180°F
Pressure	40 to 80 PSI
Flow	1 GPM @ 40 PSI
Supply Line	1/2"
Hose	1/2" ID x 10'

OPTIONS

Stainless Steel Hose Racks

Small Stainless Steel Hose Rack	# 224145

Stainless Steel Jug Racks

Jug Rack, SS, 1 Gallon, Round/Square	# 224200
Jug Rack, SS, 2 1/2 Gallon	# 224210
Jug Rack, SS, 5 Gallon, Round/Square	# 224215

Lafferty® EQUIPMENT MANUFACTURING LLC

CFS TECHNOLOGIES

www.laffertyequipment.com
501-851-2820

WARNING! READ ALL INSTRUCTIONS BEFORE USING EQUIPMENT!

OVERVIEW

The 105HCSS Mixing Station has a water flow rate of 1 GPM @ 40 PSI and is a "high concentrate" chemical proportioner for filling smaller sized containers with strong solutions. This stainless steel venturi injection system uses city water pressure (40 - 80 PSI) to draw and blend a high concentration of chemical into the water stream to create up to 1:1 dilution ratios. Ball valve activation allows for hands-free dispensing.

SAFETY & OPERATIONAL PRECAUTIONS

- **When connecting to a potable water supply follow all local codes for backflow prevention.**
- For proper performance do NOT modify, substitute nozzle, hose diameter or length.
- Manufacturer assumes no liability for the use or misuse of this unit.
- Wear protective clothing, gloves and eye wear when working with chemicals.
- Always direct the discharge away from people and electrical devices.
- Follow the chemical manufacturer's safe handling instructions.
- NEVER mix chemicals without first consulting chemical manufacturer.

TO INSTALL (REFER TO DIAGRAM ON NEXT PAGE)

If you are connecting to a potable water supply follow all local codes for backflow prevention.

1. Mount the unit to a suitable surface above the chemical supply to prevent siphoning.
2. Connect hose(s) as shown in the diagram.
3. Flush any new plumbing of debris before connecting water.
4. Connect water supply. Install a water filter if water piping is older or has known contaminants.

Set the chemical dilution ratio by threading one of the color coded metering tip or plug in the chemical suction line. See chemical labels for dilution ratio recommendation or consult your chemical supplier.

- For the strongest dilution ratio do NOT install a metering plug or colored metering tip.
- An inline metering tip holder is provided, along with two plugs for 2:1 or 3:1 ratios.
- The dilution ratios in the metering tip chart are based on water thin chemicals with a viscosity of 1CPS.
- Thicker chemicals will require a larger tip than the ratios shown in the chart.
- Select the tip color that is closest to your desired chemical strength and thread into the tip holder as a starting place. **DO NOT OVER-TIGHTEN.**
- Splice metering tip holder or plug into suction tube, as shown in the diagram, and secure with clamp (certain models only).
- Application results will ultimately determine final tip color or plug size.
- Push the chemical tubes over the suction hose barb and the tip holder, and place the strainer in the chemical concentrate.
- Push the discharge tubes completely over the discharge barb.
- If necessary, cut suction tube(s) to length before attaching suction strainer.

TO OPERATE

1. Hold the discharge tube inside the container to be filled, do not release it, completely open the inlet ball valve.
2. When container is filled to the desired level, close the ball valve and keep the discharge tube in the container until it completely drains before removing it. Do NOT kink the discharge hose.
3. Make final tip metering tip / plug adjustments based on results.

METERING TIP SELECTION

METERING TIP COLOR	OZ/MIN	DILUTION RATIO @ 40 PSI
Brown	0.56	229:1
Clear	0.88	145:1
Bright Purple	1.38	93:1
White	2.15	60:1
Pink	2.93	44:1
Corn Yellow	3.84	33:1
Dark Green	4.88	26:1
Orange	5.77	22:1
Gray	6.01	21:1
Light Green	7.01	18:1
Med. Green	8.06	16:1
Clear Pink	9.43	14:1
Yellow Green	11.50	11:1
Burgundy	11.93	11:1
Pale Pink	13.87	9:1
Light Blue	15.14	8:1
Dark Purple	17.88	7:1
Navy Blue	25.36	5:1
Clear Aqua	28.60	4:1
Black	50.00	3:1
No Tip Ratio Up To:		1:1

The dilution ratios above are approximate values. Due to chemical viscosity, actual dilution ratios may vary.

FORMULA

GPM × 128 ÷ Desired Dilution Ratio = oz/min

- *See Unit Flow Rates chart for GPM*
- *Use 20 for 20:1 dilution ratio, 30 for 30:1, etc.*
- *Match calculated ounces per minute (oz/min) to nearest oz/min in Metering Tip Selection chart.*

UNIT FLOW RATES

PSI	GPM
40	1.00
50	1.12
60	1.22
70	1.32
80	1.41

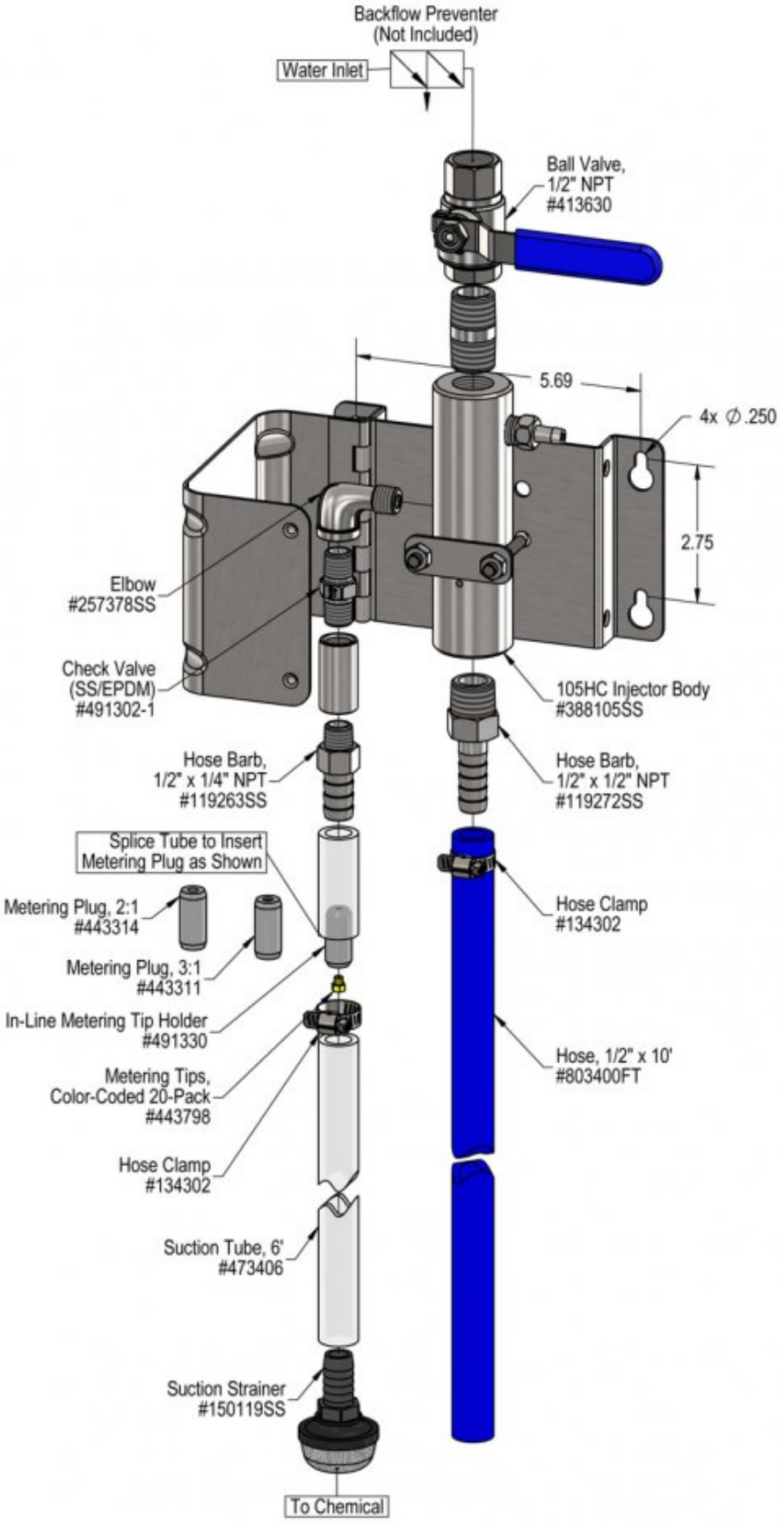
Backflow Preventer
(Not Included)
Water Inlet
Ball Valve,
1/2" NPT
#413630
5.69
4x ∅.250
2.75
Elbow
#257378SS
Check Valve
(SS/EPDM)
#491302-1
105HC Injector Body
#388105SS
Hose Barb,
1/2" x 1/4" NPT
#119263SS
Hose Barb,
1/2" x 1/2" NPT
#119272SS
Splice Tube to Insert
Metering Plug as Shown
Metering Plug, 2:1
#443314
Metering Plug, 3:1
#443311
Hose Clamp
#134302
In-Line Metering Tip Holder
#491330
Metering Tips,
Color-Coded 20-Pack
#443798
Hose, 1/2" x 10'
#803400FT
Hose Clamp
#134302
Suction Tube, 6'
#473406
Suction Strainer
#150119SS
To Chemical

Troubleshooting Guide

Problem	Possible Cause / Solution	
	Startup	Maintenance
A) Unit will not draw chemical.	1, 2, 3, 6	7, 8, 9, 10, 11, 12
B) Dilution too weak.	4	11
C) Dilution too strong	5	
D) Water backing up into chemical container.		8

Possible Cause / Solution

Startup

1. **Water pressure or volume too low**
   - See requirements.
2. **Ball valve not completely open**
   - Completely open the ball valve.
3. **Chemical tube not immersed in chemical or chemical depleted**
   - Immerse tube or replenish.
4. **Metering plug too small**
   - Install larger metering plug.
5. **No metering plug installed or metering plug too large**
   - Install smaller metering plug.
6. **Discharge hose kinked or wrong size**
   - Straighten hose / See requirements

Maintenance

7. **Chemical strainer or metering tip partially blocked**
   - Clean or replace chemical strainer and/or metering tip.
8. **Chemical valve stuck or failed**
   - Clean or replace.
9. **Vacuum leak in chemical pick-up connections**
   - Tighten the connection.
10. **Chemical tube stretched out where tube slides over metering tip holder or pin hole/cut in chemical tube (sucking air in)**
    - Cut off end of tube or replace tube.
11. **Hard water scale or chemical build-up may have formed in the body causing poor or no chemical pick-up**
    - Follow Preventive Maintenance instructions below, using hot water and/or descaling acid. When there is no draw at all carefully remove fittings and soak entire body in descaling acid.
12. **Optional discharge ball valve or trigger gun not completely open**
    - Completely open / depress trigger

PREVENTIVE MAINTENANCE: When the unit will be out of service for extended periods, place chemical tube(s) in water and flush the chemical out of the unit to help prevent chemical from drying out and causing build-up. Periodically check and clean chemical strainer and replace if missing.